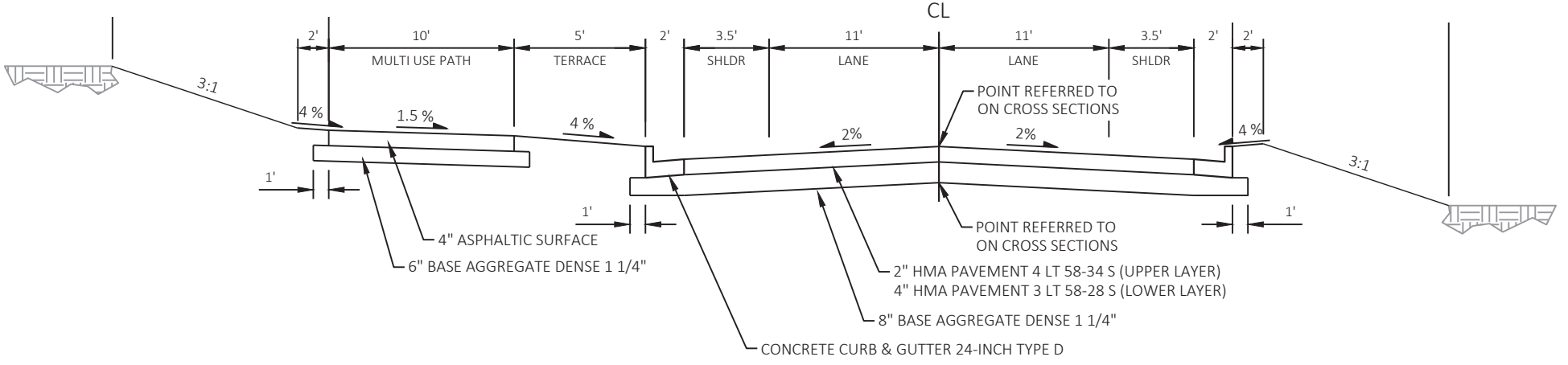

FINISHED TYPICAL SECTION - S HASTINGS WAY

STA 101+00 - STA 133+25